Freescale Semiconductor
Technical Data

Document Number: MW7IC2425N
Rev. 0, 3/2009

RoHS

RF Power Field Effect Transistors

N-Channel Enhancement-Mode Lateral MOSFETs

MW7IC2425NR1
MW7IC2425GNR1
MW7IC2425NBR1

2450 MHz, 25 W CW, 28 V
LATERAL N-CHANNEL
RF POWER MOSFETs

Designed primarily for CW large-signal output and driver applications at 2450 MHz. Devices are suitable for use in industrial, medical and scientific applications.

- Typical CW Performance: V_{DD} = 28 Volts, I_{DQ1} = 55 mA, I_{DQ2} = 195 mA, P_{out} = 25 Watts CW, f = 2450 MHz
  Power Gain — 27.7 dB
  Power Added Efficiency — 43.8%
- Capable of Handling 10:1 VSWR, @ 28 Vdc, 2450 MHz, 25 Watts CW Output Power

Features

- Qualified Up to a Maximum of 28 V_{DD} Operation
- Integrated Quiescent Current Temperature Compensation with Enable/Disable Function [1]
- Integrated ESD Protection
- Excellent Thermal Stability
- 225°C Capable Plastic Package
- RoHS Compliant
- In Tape and Reel. R1 Suffix = 500 Units per 44 mm, 13 inch Reel.

CASE 1886-01
TO-270 WB-16
PLASTIC
MW7IC2425NR1

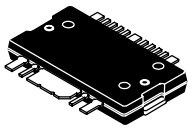

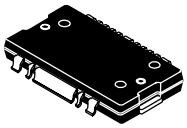

CASE 1887-01
TO-270 WB-16 GULL
PLASTIC
MW7IC2425GNR1

CASE 1329-09
TO-272 WB-16
PLASTIC
MW7IC2425NBR1

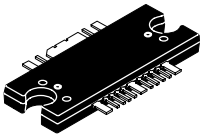

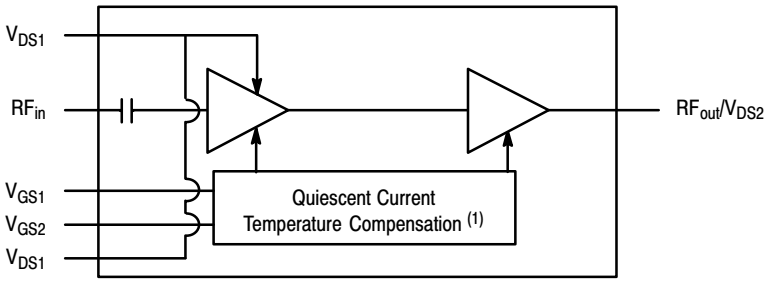

Figure 1. Functional Block Diagram

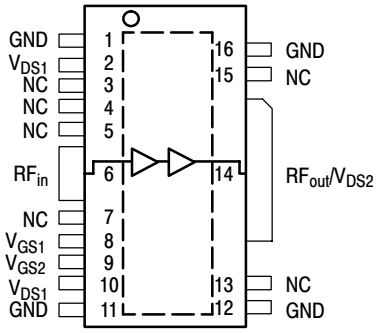

(Top View)

Note: Exposed backside of the package is the source terminal for the transistors.

Figure 2. Pin Connections

1. Refer to AN1977, *Quiescent Current Thermal Tracking Circuit in the RF Integrated Circuit Family* and to AN1987, *Quiescent Current Control for the RF Integrated Circuit Device Family*. Go to http://www.freescale.com/rf. Select Documentation/Application Notes - AN1977 or AN1987.

© Freescale Semiconductor, Inc., 2009. All rights reserved.

freescale semiconductor

Table 1. Maximum Ratings

Rating	Symbol	Value	Unit
Drain-Source Voltage	V_{DS}	-0.5, +65	Vdc
Gate-Source Voltage	V_{GS}	-0.5, +10	Vdc
Operating Voltage	V_{DD}	32, +0	Vdc
Storage Temperature Range	T_{stg}	- 65 to +150	°C
Case Operating Temperature	T_C	150	°C
Operating Junction Temperature [1,2]	T_J	225	°C
Input Power	P_{in}	20	dBm

Table 2. Thermal Characteristics (In Freescale Narrowband Test Fixture)

Characteristic		Symbol	Value [2,3]	Unit
Thermal Resistance, Junction to Case (Case Temperature 80°C, P_{out} = 25 W CW)	Stage 1, 28 Vdc, I_{DQ1} = 55 mA Stage 2, 28 Vdc, I_{DQ2} = 195 mA	$R_{\theta JC}$	 6.1 1.2	°C/W

Table 3. ESD Protection Characteristics

Test Methodology	Class
Human Body Model (per JESD22-A114)	1B (Minimum)
Machine Model (per EIA/JESD22-A115)	A (Minimum)
Charge Device Model (per JESD22-C101)	II (Minimum)

Table 4. Moisture Sensitivity Level

Test Methodology	Rating	Package Peak Temperature	Unit
Per JESD22-A113, IPC/JEDEC J-STD-020	3	260	°C

Table 5. Electrical Characteristics (T_C = 25°C unless otherwise noted)

Characteristic	Symbol	Min	Typ	Max	Unit
Stage 1 - Off Characteristics					
Zero Gate Voltage Drain Leakage Current (V_{DS} = 65 Vdc, V_{GS} = 0 Vdc)	I_{DSS}	—	—	10	μAdc
Zero Gate Voltage Drain Leakage Current (V_{DS} = 28 Vdc, V_{GS} = 0 Vdc)	I_{DSS}	—	—	1	μAdc
Gate-Source Leakage Current (V_{GS} = 1.5 Vdc, V_{DS} = 0 Vdc)	I_{GSS}	—	—	1	μAdc
Stage 1 - On Characteristics					
Gate Threshold Voltage (V_{DS} = 10 Vdc, I_D = 20 μAdc)	$V_{GS(th)}$	1.2	1.9	2.7	Vdc
Gate Quiescent Voltage (V_{DS} = 28 Vdc, I_{DQ1} = 55 mA) [4]	$V_{GS(Q)}$	—	2.7	—	Vdc
Fixture Gate Quiescent Voltage (V_{DD} = 28 Vdc, I_{DQ1} = 55 mAdc) [4,5]	$V_{GG(Q)}$	10.3	11.2	12.6	Vdc

1. Continuous use at maximum temperature will affect MTTF.
2. MTTF calculator available at http://www.freescale.com/rf. Select Software & Tools/Development Tools/Calculators to access MTTF calculators by product.
3. Refer to AN1955, *Thermal Measurement Methodology of RF Power Amplifiers.* Go to http://www.freescale.com/rf. Select Documentation/Application Notes - AN1955.
4. Measured in Freescale Narrowband Test Fixture.
5. See Appendix A for functional test measurements and test fixture.

(continued)

Table 5. Electrical Characteristics (T_C = 25°C unless otherwise noted) **(continued)**

Characteristic	Symbol	Min	Typ	Max	Unit
Stage 2 - Off Characteristics					
Zero Gate Voltage Drain Leakage Current (V_{DS} = 65 Vdc, V_{GS} = 0 Vdc)	I_{DSS}	—	—	10	μAdc
Zero Gate Voltage Drain Leakage Current (V_{DS} = 28 Vdc, V_{GS} = 0 Vdc)	I_{DSS}	—	—	1	μAdc
Gate-Source Leakage Current (V_{GS} = 1.5 Vdc, V_{DS} = 0 Vdc)	I_{GSS}	—	—	1	μAdc
Stage 2 - On Characteristics					
Gate Threshold Voltage (V_{DS} = 10 Vdc, I_D = 80 μAdc)	$V_{GS(th)}$	1.2	1.9	2.7	Vdc
Gate Quiescent Voltage (V_{DS} = 28 Vdc, I_{DQ2} = 195 mAdc) (1)	$V_{GS(Q)}$	—	2.7	—	Vdc
Fixture Gate Quiescent Voltage (V_{DD} = 28 Vdc, I_{DQ2} = 195 mAdc) (1,2)	$V_{GG(Q)}$	9.5	10.5	11.5	Vdc
Drain-Source On-Voltage (V_{GS} = 10 Vdc, I_D = 800 mAdc)	$V_{DS(on)}$	0.15	0.47	0.8	Vdc
Stage 2 - Dynamic Characteristics (3)					
Output Capacitance (V_{DS} = 28 Vdc ± 30 mV(rms)ac @ 1 MHz, V_{GS} = 0 Vdc)	C_{oss}	—	111	—	pF
Narrowband Performance Specifications (4) (In Freescale Narrowband Test Fixture,(2) 50 ohm system) V_{DD} = 28 Vdc, I_{DQ1} = 55 mA, I_{DQ2} = 195 mA, P_{out} = 25 W CW, f = 2450 MHz					
Power Gain	G_{ps}	25.5	27.7	30.5	dB
Power Added Efficiency	PAE	41.5	43.8	—	%
Input Return Loss	IRL	—	-18	-10	dB
Functional Tests (2) (In Freescale Test Fixture, 50 ohm system) V_{DD} = 28 Vdc, I_{DQ1} = 77 mA, I_{DQ2} = 275 mA, P_{out} = 4 W Avg., f = 2700 MHz, WiMAX, OFDM 802.16d, 64 QAM $^3/_4$, 4 Bursts, 10 MHz Channel Bandwidth, Input Signal PAR = 9.5 dB @ 0.01% Probability on CCDF. ACPR measured in 1 MHz Channel Bandwidth @ ±8.5 MHz Offset.					
Power Gain	G_{ps}	25.5	28.5	30.5	dB
Power Added Efficiency	PAE	15	17	—	%
Output Peak-to-Average Ratio @ 0.01% Probability on CCDF	PAR	—	9	—	dB
Adjacent Channel Power Ratio	ACPR	—	-50	-46	dBc
Input Return Loss	IRL	—	-15	-10	dB

1. Measured in Freescale Narrowband Test Fixture.
2. See Appendix A for functional test fixture documentation.
3. Part internally matched both on input and output.
4. Measurement made with device in straight lead configuration before any lead forming operation is applied.

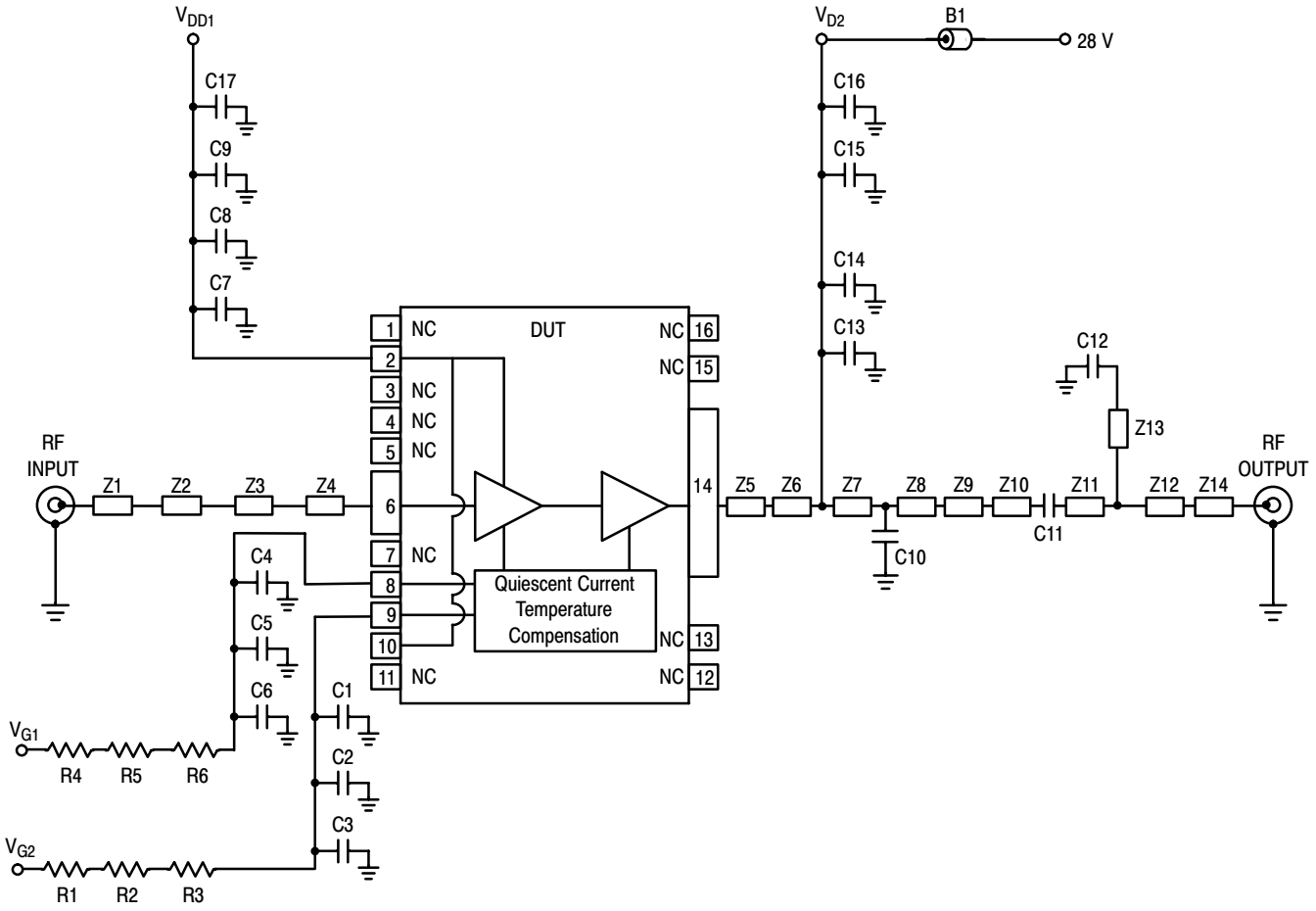

Z1	0.500″ x 0.027″ Microstrip	Z9	0.040″ x 0.061″ Microstrip
Z2	0.075″ x 0.127″ Microstrip	Z10	0.020″ x 0.050″ Microstrip
Z3	1.640″ x 0.027″ Microstrip	Z11	0.050″ x 0.050″ Microstrip
Z4	0.100″ x 0.042″ Microstrip	Z12	0.050″ x 0.027″ Microstrip
Z5	0.151″ x 0.268″ Microstrip	Z13*	0.338″ x 0.020″ Microstrip
Z6	0.025″ x 0.268″ x 0.056″ Taper	Z14	1.551″ x 0.027″ Microstrip
Z7	0.100″ x 0.056″ Microstrip	PCB	Rogers R04350B, 0.0133″, ε_r = 3.48
Z8	0.306″ x 0.056″ Microstrip		

* Line length includes microstrip bends

Figure 3. MW7IC2425NR1(GNR1)(NBR1) Narrowband Test Circuit Schematic

Table 6. MW7IC2425NR1(GNR1)(NBR1) Narrowband Test Circuit Component Designations and Values

Part	Description	Part Number	Manufacturer
B1	47 Ω, 100 MHz Short Ferrite Bead	2743019447	Fair-Rite
C1, C4, C7, C12, C15	6.8 pF Chip Capacitors	ATC600S6R8CT250XT	ATC
C2, C5, C8, C13	10 nF Chip Capacitors	C0603C103J5RAC	Kemet
C3, C6, C9, C14	1 µF, 50 V Chip Capacitors	GRM32RR71H105KA01B	Murata
C10	2.4 pF Chip Capacitor	ATC600S2R4BT250XT	ATC
C11	3.3 pF Chip Capacitor	ATC600S3R3BT250XT	ATC
C16, C17	10 µF, 50 V Chip Capacitors	GRM55DR61H106KA88B	Murata
R1, R4	12 KΩ, 1/4 W Chip Resistors	CRCW12061202FKEA	Vishay
R2, R3, R5, R6	1 KΩ, 1/4 W Chip Resistors	CRCW12061001FKEA	Vishay

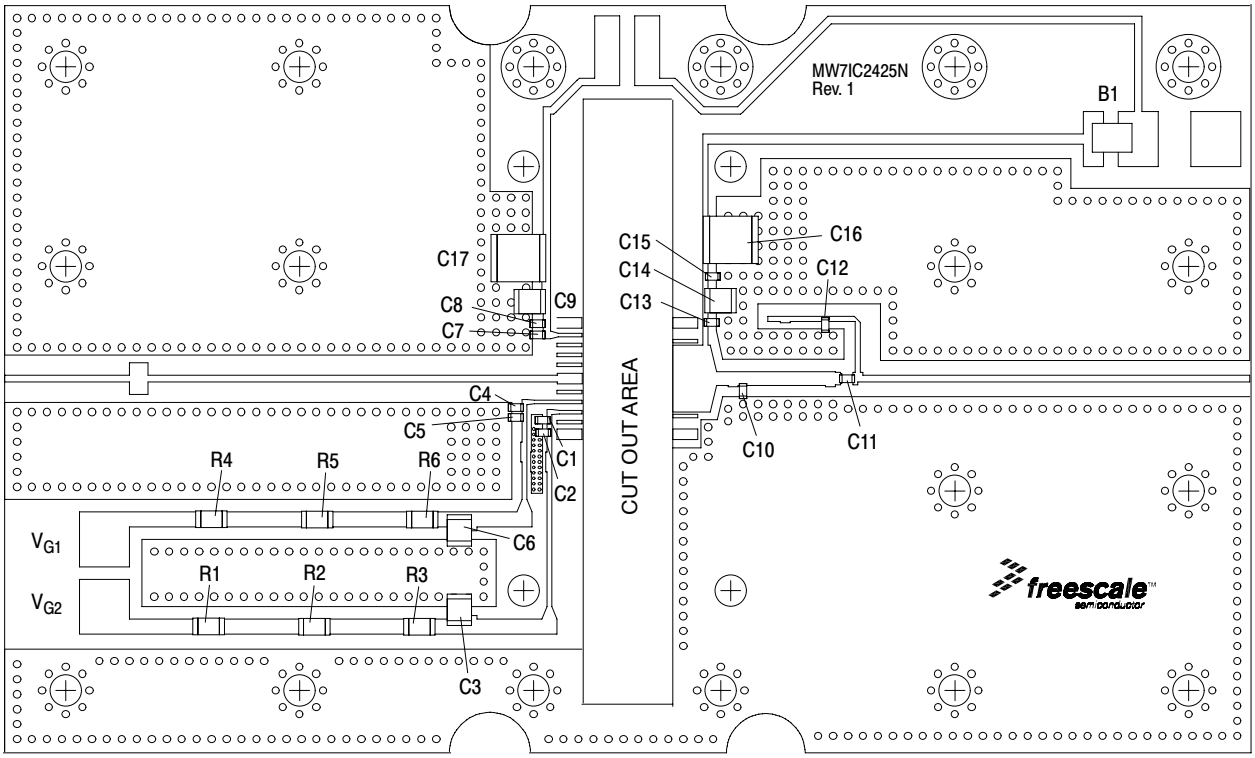

Figure 4. MW7IC2425NR1(GNR1)(NBR1) Narrowband Test Circuit Component Layout

TYPICAL CHARACTERISTICS — NARROWBAND

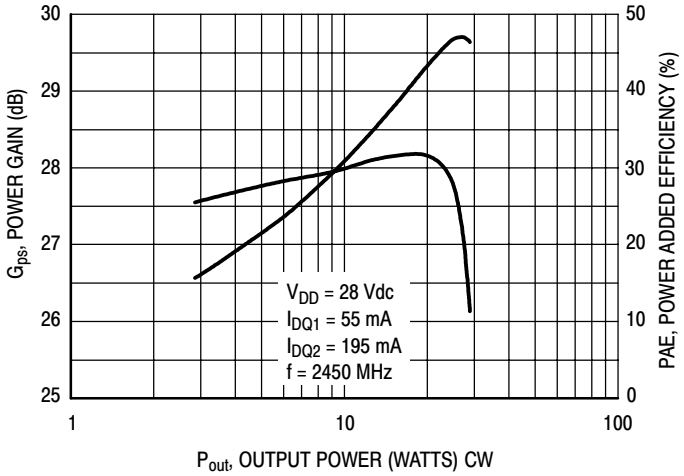

Figure 5. Power Gain and Power Added Efficiency versus CW Output Power

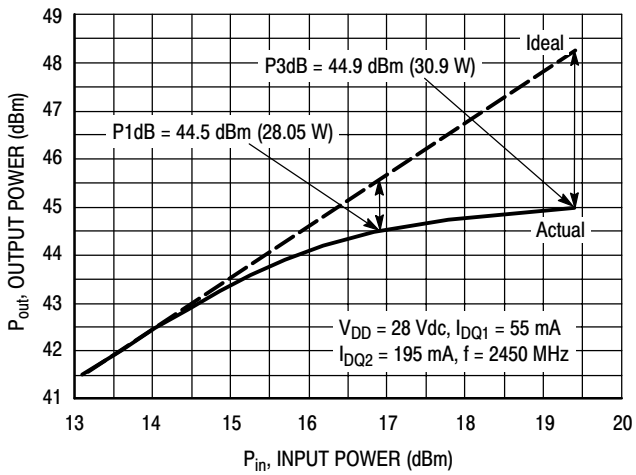

Figure 6. CW Output Power versus Input Power

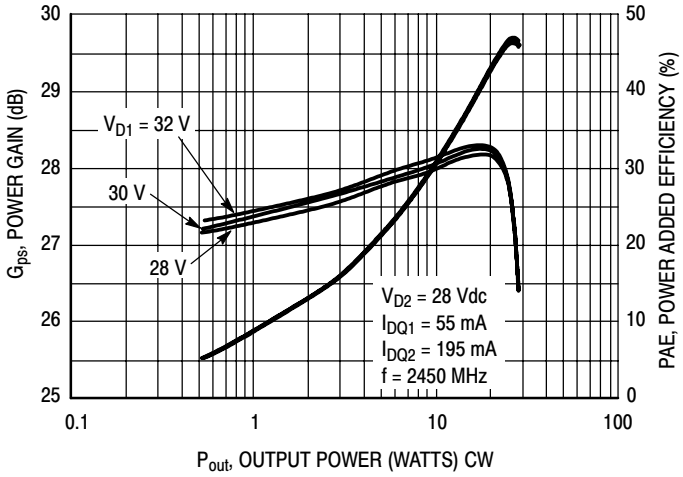

Figure 7. Power Gain and Power Added Efficiency versus CW Output Power as a Function of V_{D1}

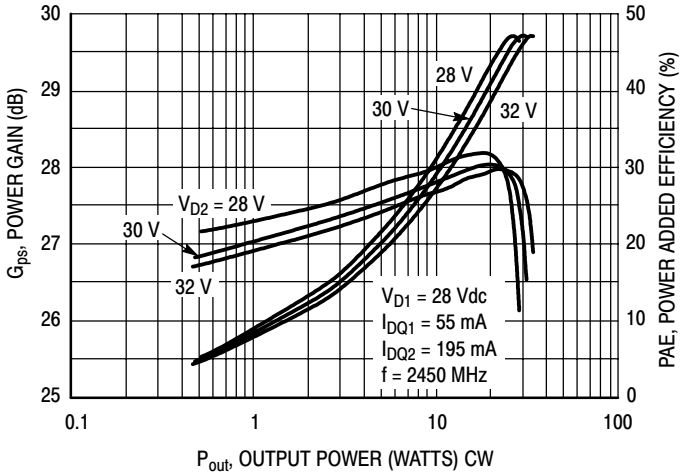

Figure 8. Power Gain and Power Added Efficiency versus CW Output Power as a Function of V_{D2}

TYPICAL CHARACTERISTICS — NARROWBAND

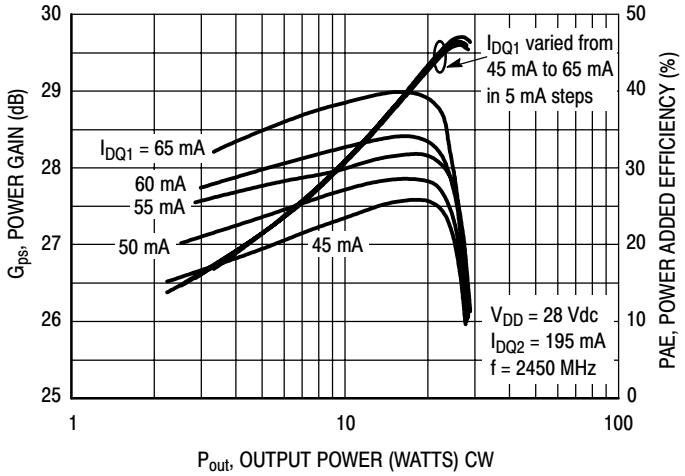

Figure 9. Power Gain and Power Added Efficiency versus CW Output Power as a Function of I_{DQ1}

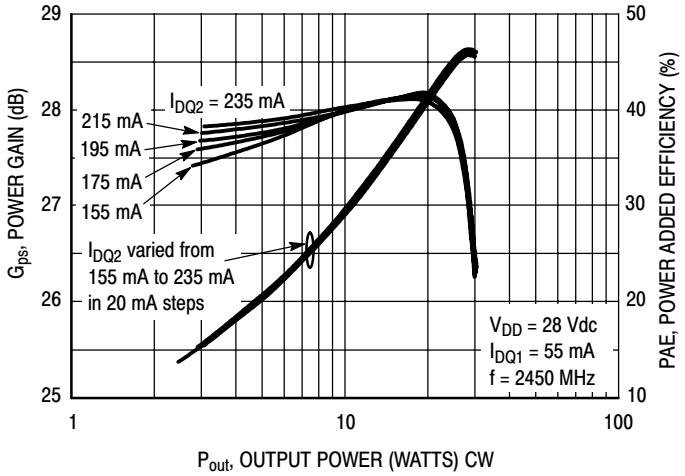

Figure 10. Power Gain and Power Added Efficiency versus CW Output Power as a Function of I_{DQ2}

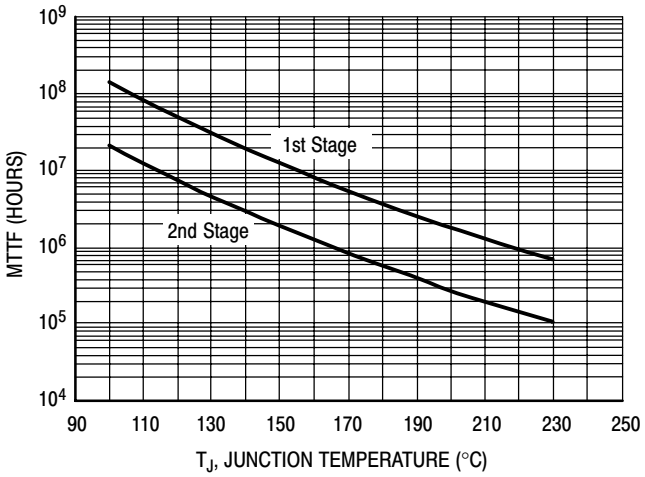

This above graph displays calculated MTTF in hours when the device is operated at V_{DD} = 28 Vdc, P_{out} = 25 W CW, and PAE = 43.8%.

MTTF calculator available at http://www.freescale.com/rf. Select Software & Tools/Development Tools/Calculators to access MTTF calculators by product.

Figure 11. MTTF versus Junction Temperature

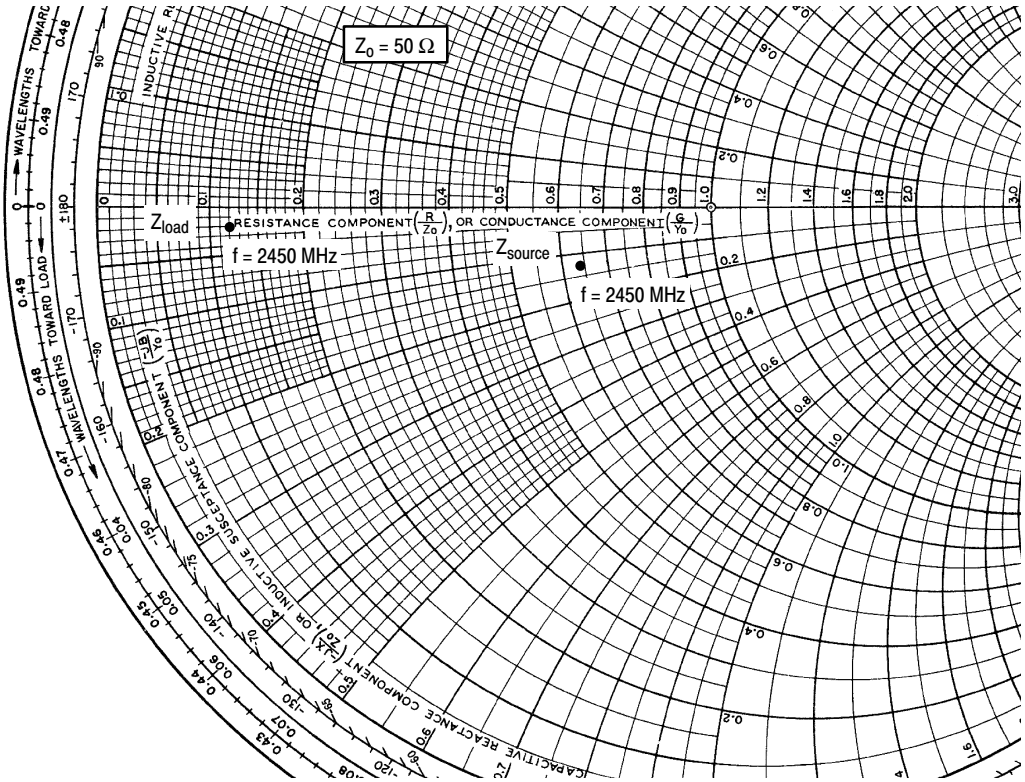

V_{DD} = 28 Vdc, I_{DQ1} = 55 mA, I_{DQ2} = 195 mA, P_{out} = 25 W CW

f MHz	Z_{source} Ω	Z_{load} Ω
2450	32 - j6.256	6.2 - j1.17

Z_{source} = Test circuit impedance as measured from gate to ground.

Z_{load} = Test circuit impedance as measured from drain to ground.

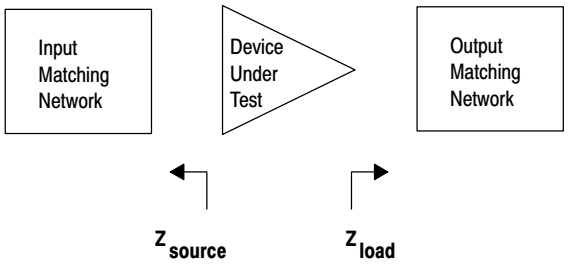

Figure 12. Series Equivalent Source and Load Impedance — Narrowband

PACKAGE DIMENSIONS

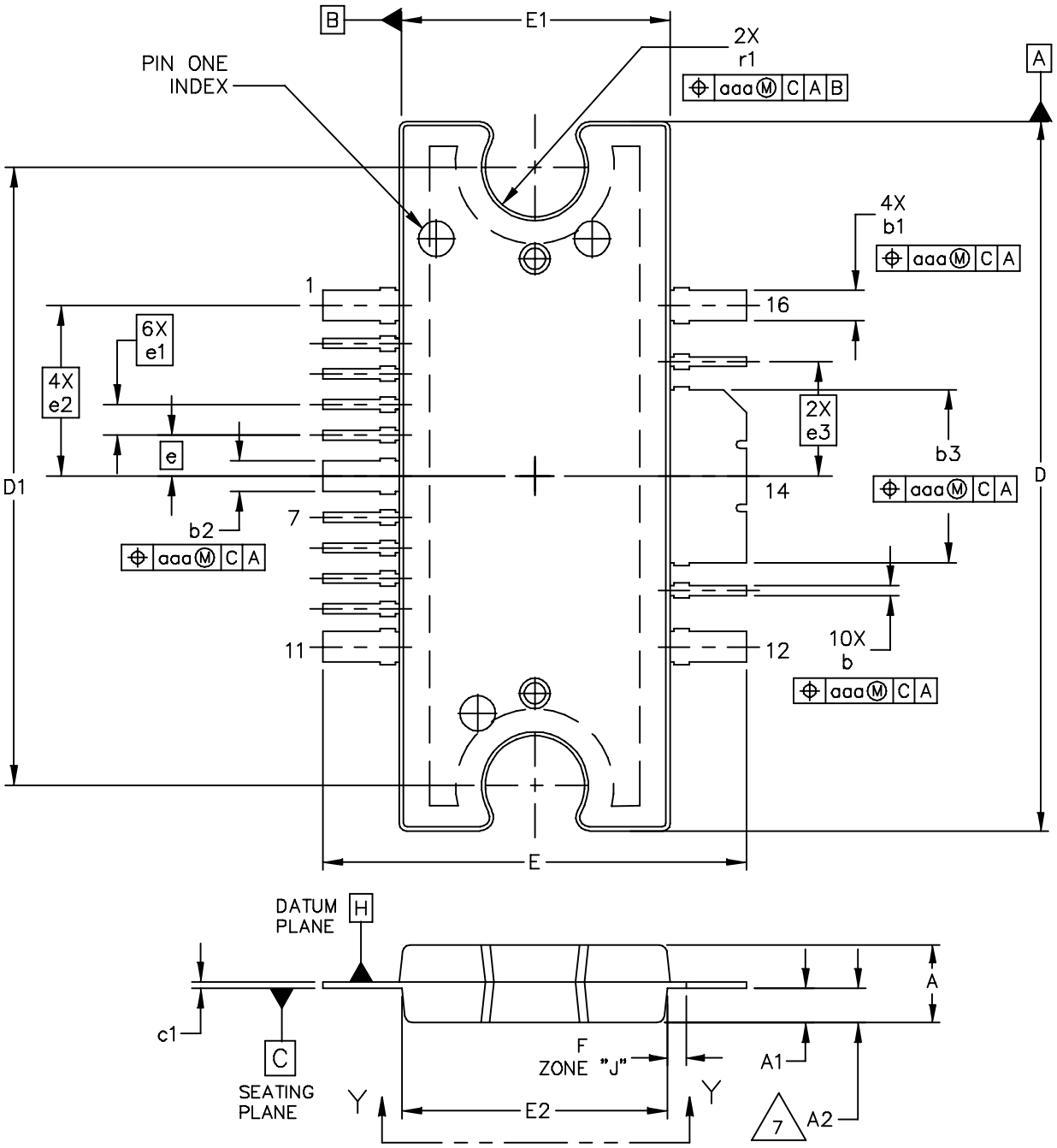

© FREESCALE SEMICONDUCTOR, INC. ALL RIGHTS RESERVED.	MECHANICAL OUTLINE	PRINT VERSION NOT TO SCALE
TITLE: TO-272 WIDE BODY MULTI-LEAD	DOCUMENT NO: 98ARH99164A	REV: M
	CASE NUMBER: 1329-09	23 AUG 2007
	STANDARD: NON-JEDEC	

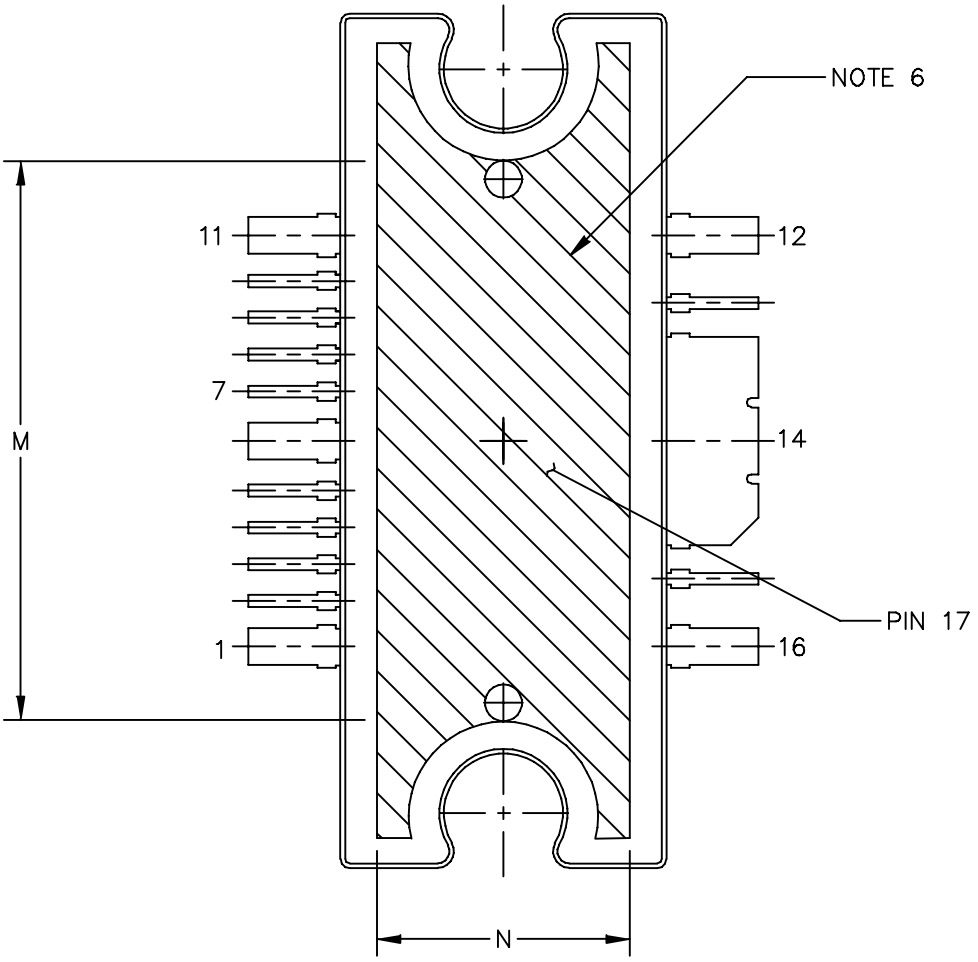

VIEW Y–Y

© FREESCALE SEMICONDUCTOR, INC. ALL RIGHTS RESERVED.	MECHANICAL OUTLINE	PRINT VERSION NOT TO SCALE	
TITLE: TO–272 WIDE BODY MULTI–LEAD	DOCUMENT NO: 98ARH99164A		REV: M
	CASE NUMBER: 1329–09		23 AUG 2007
	STANDARD: NON–JEDEC		

NOTES:

1. CONTROLLING DIMENSION: INCH

2. INTERPRET DIMENSIONS AND TOLERANCES PER ASME Y14.5M–1994.

3. DATUM PLANE –H– IS LOCATED AT THE TOP OF LEAD AND IS COINCIDENT WITH THE LEAD WHERE THE LEAD EXITS THE PLASTIC BODY AT THE TOP OF THE PARTING LINE.

4. DIMENSIONS "D" AND "E1" DO NOT INCLUDE MOLD PROTRUSION. ALLOWABLE PROTRUSION IS .006 (0.15) PER SIDE. DIMENSIONS "D" AND "E1" DO INCLUDE MOLD MISMATCH AND ARE DETERMINED AT DATUM PLANE –H–.

5. DIMENSIONS "b", "b1", "b2" AND "b3" DO NOT INCLUDE DAMBAR PROTRUSION. ALLOWABLE DAMBAR PROTRUSION SHALL BE .005 (0.13) TOTAL IN EXCESS OF THE "b", "b1", "b2" AND "b3" DIMENSIONS AT MAXIMUM MATERIAL CONDITION.

6. HATCHING REPRESENTS THE EXPOSED AREA OFTHE HEAT SLUG. HATCHED AREA SHOWN IS ON THE SAME PLANE.

7. DIM A2 APPLIES WITHIN ZONE "J" ONLY.

	INCH		MILLIMETER			INCH		MILLIMETER	
DIM	MIN	MAX	MIN	MAX	DIM	MIN	MAX	MIN	MAX
A	.100	.104	2.54	2.64	b	.011	.017	0.28	0.43
A1	.038	.044	0.96	1.12	b1	.037	.043	0.94	1.09
A2	.040	.042	1.02	1.07	b2	.037	.043	0.94	1.09
D	.928	.932	23.57	23.67	b3	.225	.231	5.72	5.87
D1	.810 BSC		20.57 BSC		c1	.007	.011	.18	.28
E	.551	.559	14.00	14.20	e	.054 BSC		1.37 BSC	
E1	.353	.357	8.97	9.07	e1	.040 BSC		1.02 BSC	
E2	.346	.350	8.79	8.89	e2	.224 BSC		5.69 BSC	
F	.025 BSC		0.64 BSC		e3	.150 BSC		3.81 BSC	
M	.600	----	15.24	----	r1	.063	.068	1.6	1.73
N	.270	----	6.86	----					
					aaa	.004		.10	

© FREESCALE SEMICONDUCTOR, INC.
ALL RIGHTS RESERVED.

MECHANICAL OUTLINE | PRINT VERSION NOT TO SCALE

TITLE: TO–272 WIDE BODY MULTI–LEAD

DOCUMENT NO: 98ARH99164A | REV: M

CASE NUMBER: 1329–09 | 23 AUG 2007

STANDARD: NON–JEDEC

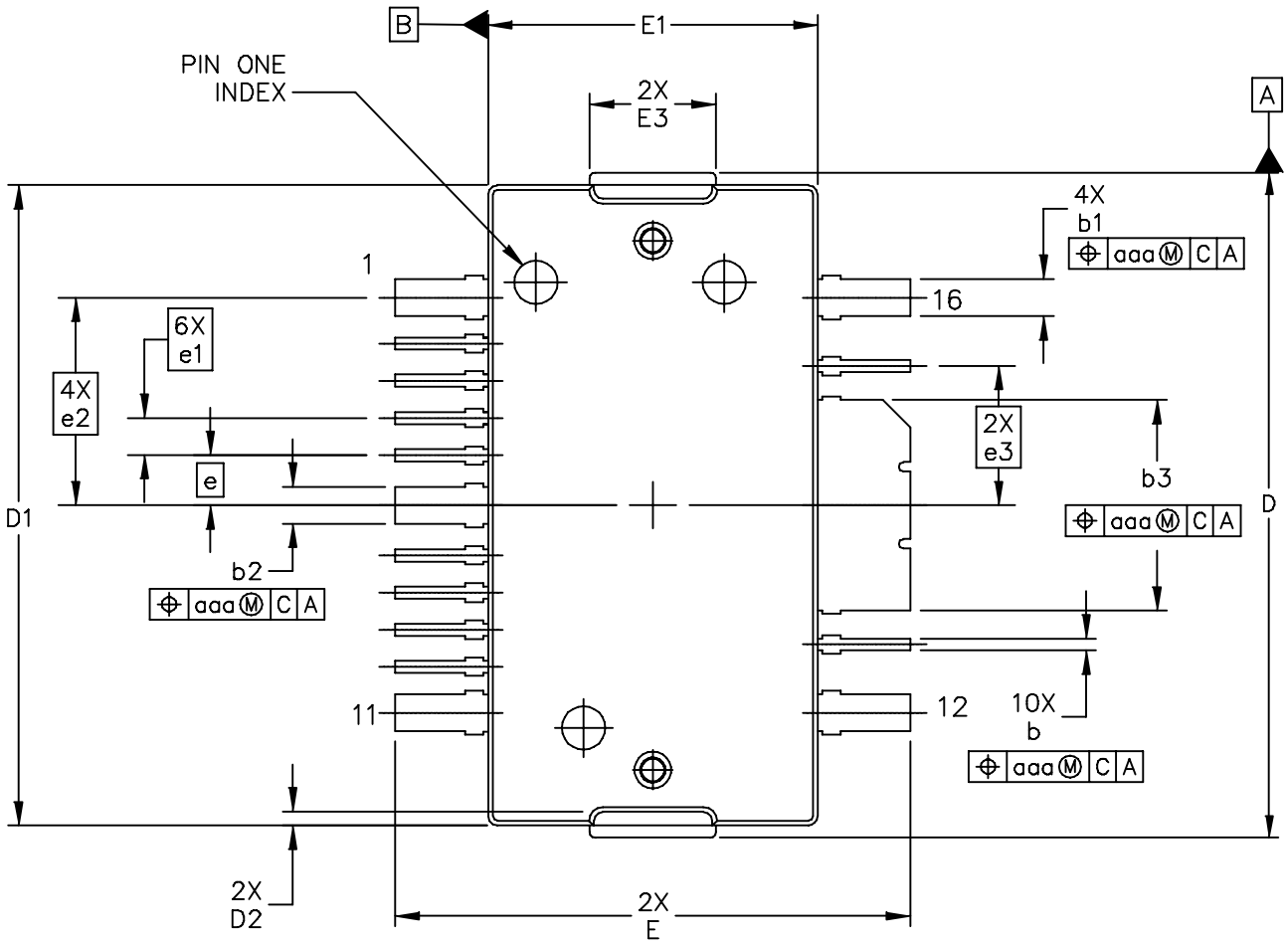

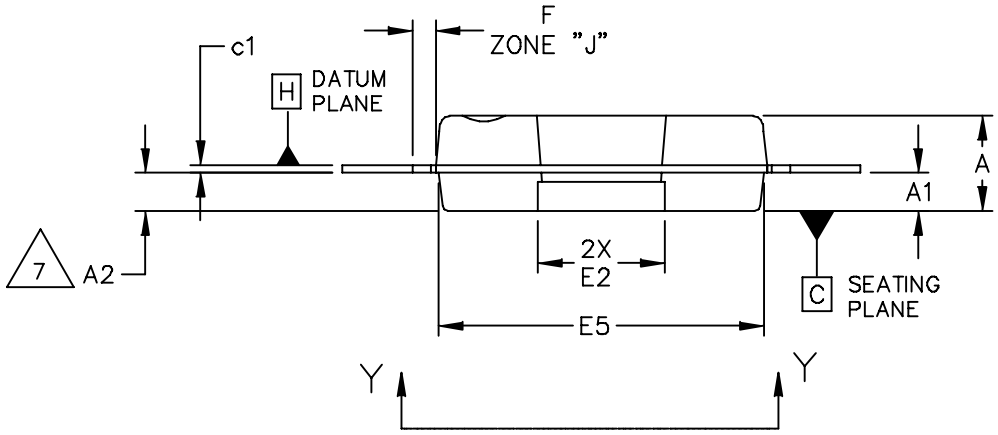

© FREESCALE SEMICONDUCTOR, INC. ALL RIGHTS RESERVED.	MECHANICAL OUTLINE	PRINT VERSION NOT TO SCALE
TITLE: TO-270 WIDE BODY 16 LEAD	DOCUMENT NO: 98ASA10754D	REV: A
	CASE NUMBER: 1886-01	31 AUG 2007
	STANDARD: NON-JEDEC	

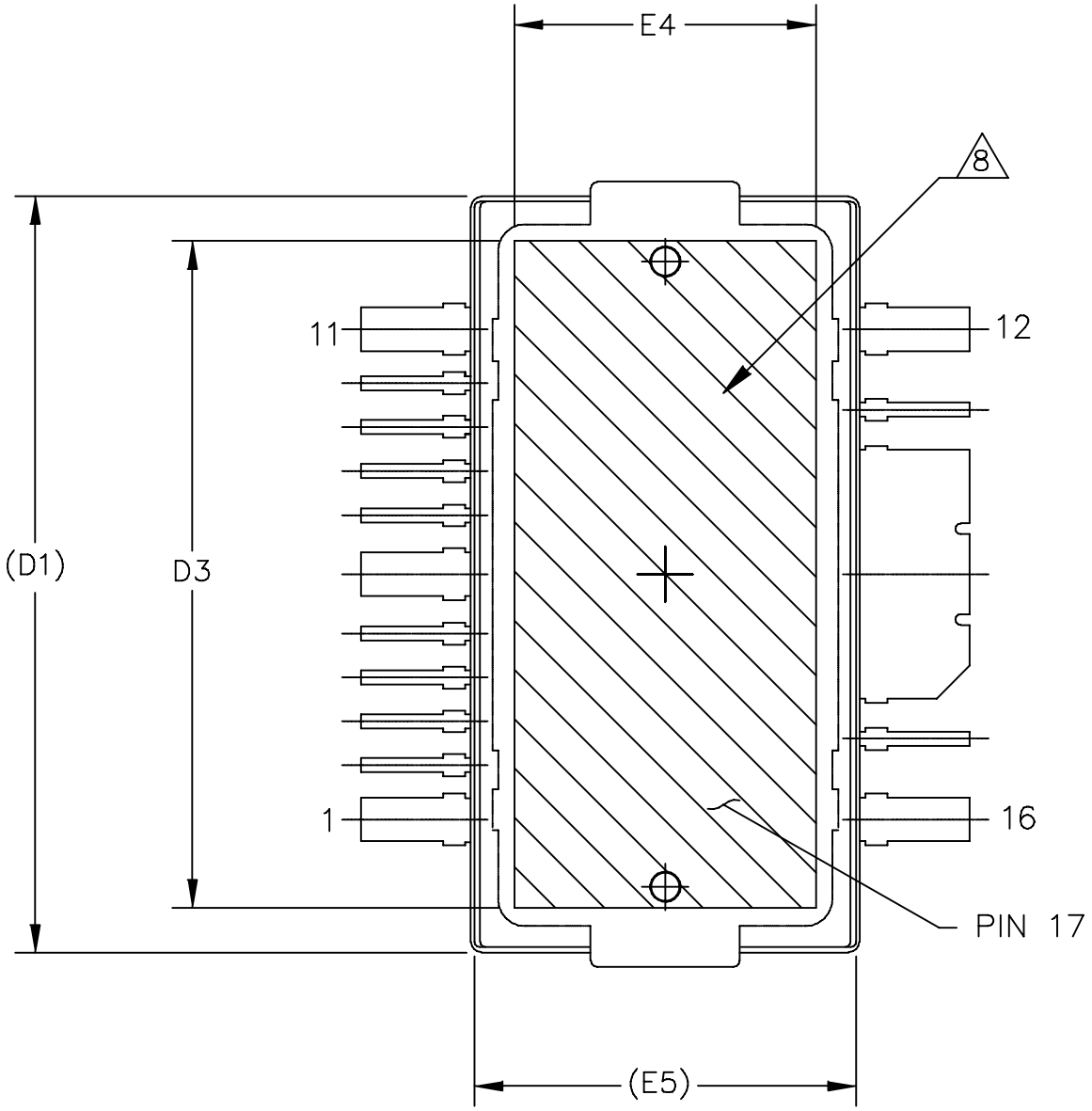

VIEW Y–Y

© FREESCALE SEMICONDUCTOR, INC. ALL RIGHTS RESERVED.	MECHANICAL OUTLINE	PRINT VERSION NOT TO SCALE
TITLE: TO–270 WIDE BODY 16 LEAD	DOCUMENT NO: 98ASA10754D	REV: A
	CASE NUMBER: 1886–01	31 AUG 2007
	STANDARD: NON–JEDEC	

NOTES:

1. CONTROLLING DIMENSION: INCH

2. INTERPRET DIMENSIONS AND TOLERANCES PER ASME Y14.5M–1994.

3. DATUM PLANE –H– IS LOCATED AT THE TOP OF LEAD AND IS COINCIDENT WITH THE LEAD WHERE THE LEAD EXITS THE PLASTIC BODY AT THE TOP OF THE PARTING LINE.

4. DIMENSIONS "D" AND "E1" DO NOT INCLUDE MOLD PROTRUSION. ALLOWABLE PROTRUSION IS .006 (0.15) PER SIDE. DIMENSIONS "D" AND "E1" DO INCLUDE MOLD MISMATCH AND ARE DETERMINED AT DATUM PLANE –H–.

5. DIMENSIONS "b", "b1", "b2" AND "b3" DO NOT INCLUDE DAMBAR PROTRUSION. ALLOWABLE DAMBAR PROTRUSION SHALL BE .005 (0.13) TOTAL IN EXCESS OF THE "b", "b1", "b2" AND "b3" DIMENSIONS AT MAXIMUM MATERIAL CONDITION.

6. DATUM –A– AND –B– TO BE DETERMINED AT DATUM PLANE –H–.

7. DIMENSION A2 APPLIES WITHIN ZONE "J" ONLY.

8. HATCHING REPRESENTS THE EXPOSED AREA OF THE HEAT SLUG. HATCHED AREA SHOWN IS ON THE SAME PLANE.

DIM	INCH MIN	INCH MAX	MILLIMETER MIN	MILLIMETER MAX	DIM	INCH MIN	INCH MAX	MILLIMETER MIN	MILLIMETER MAX
A	.100	.104	2.54	2.64	F	.025 BSC		0.64 BSC	
A1	.039	.043	0.99	1.09	b	.011	.017	0.28	0.43
A2	.040	.042	1.02	1.07	b1	.037	.043	0.94	1.09
D	.712	.720	18.08	18.29	b2	.037	.043	0.94	1.09
D1	.688	.692	17.48	17.58	b3	.225	.231	5.72	5.87
D2	.011	.019	0.28	0.48	c1	.007	.011	.18	.28
D3	.600	---	15.24	---	e	.054 BSC		1.37 BSC	
E	.551	.559	14	14.2	e1	.040 BSC		1.02 BSC	
E1	.353	.357	8.97	9.07	e2	.224 BSC		5.69 BSC	
E2	.132	.140	3.35	3.56	e3	.150 BSC		3.81 BSC	
E3	.124	.132	3.15	3.35	aaa	.004		.10	
E4	.270	---	6.86	---					
E5	.346	.350	8.79	8.89					

© FREESCALE SEMICONDUCTOR, INC.
ALL RIGHTS RESERVED.

MECHANICAL OUTLINE | PRINT VERSION NOT TO SCALE

TITLE: TO–270 WIDE BODY 16 LEAD

DOCUMENT NO: 98ASA10754D | REV: A

CASE NUMBER: 1886–01 | 31 AUG 2007

STANDARD: NON–JEDEC

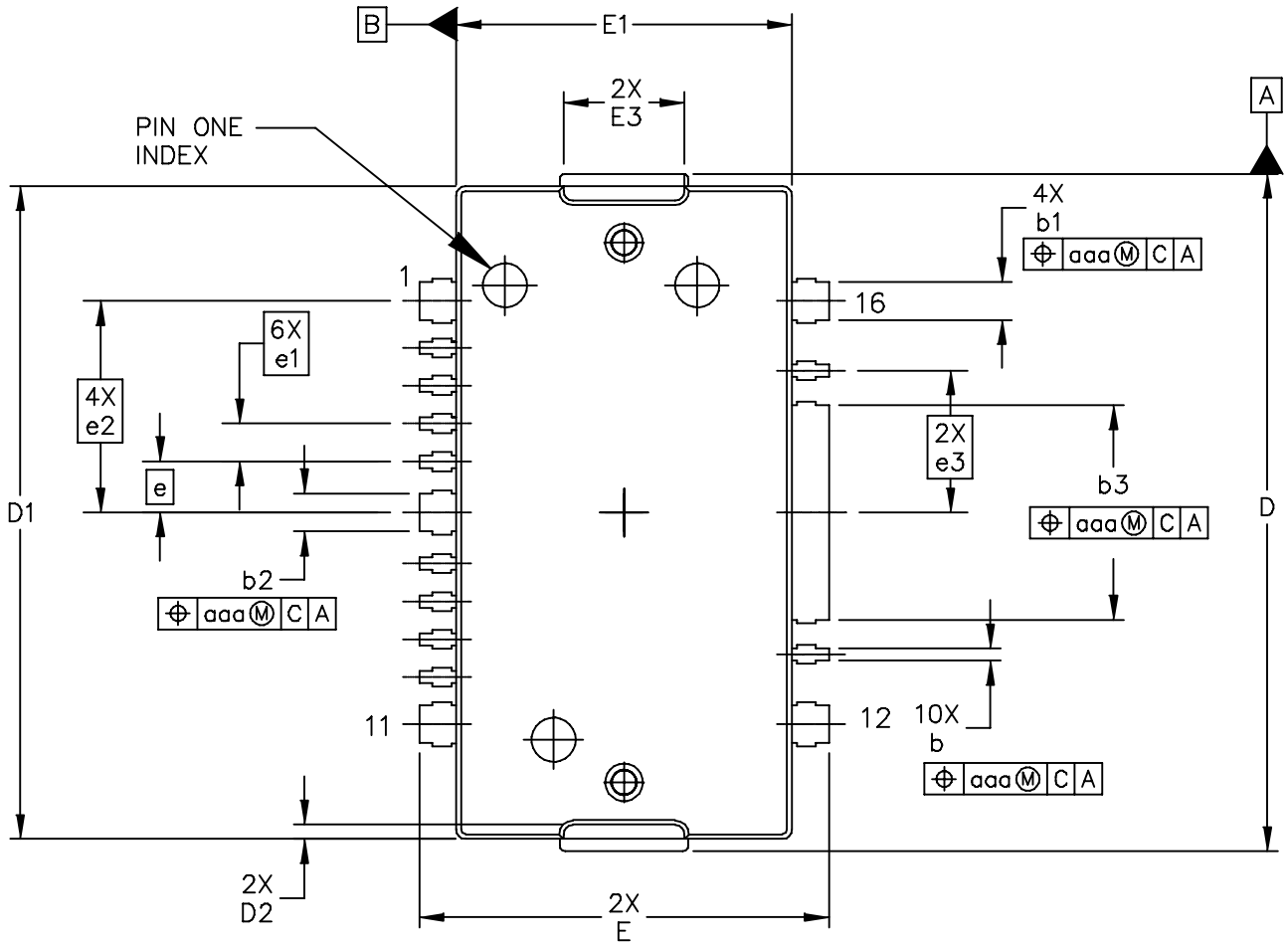

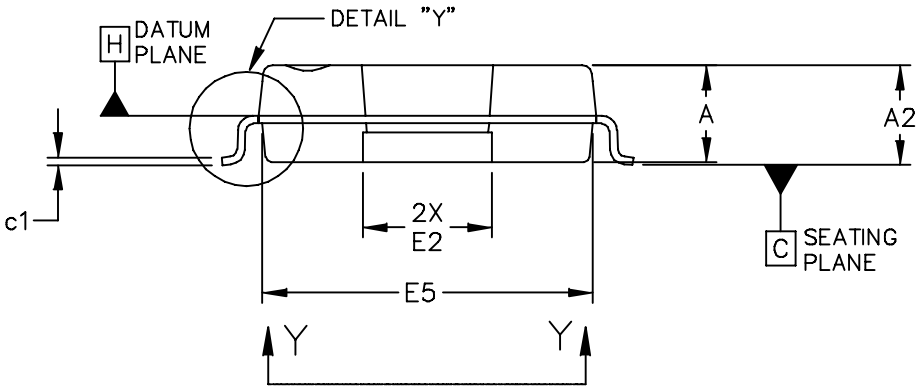

© FREESCALE SEMICONDUCTOR, INC. ALL RIGHTS RESERVED.	MECHANICAL OUTLINE	PRINT VERSION NOT TO SCALE	
TITLE: TO–270 WIDE BODY 16 LEAD, GULL WING	DOCUMENT NO: 98ASA10755D		REV: A
	CASE NUMBER: 1887–01		31 AUG 2007
	STANDARD: NON–JEDEC		

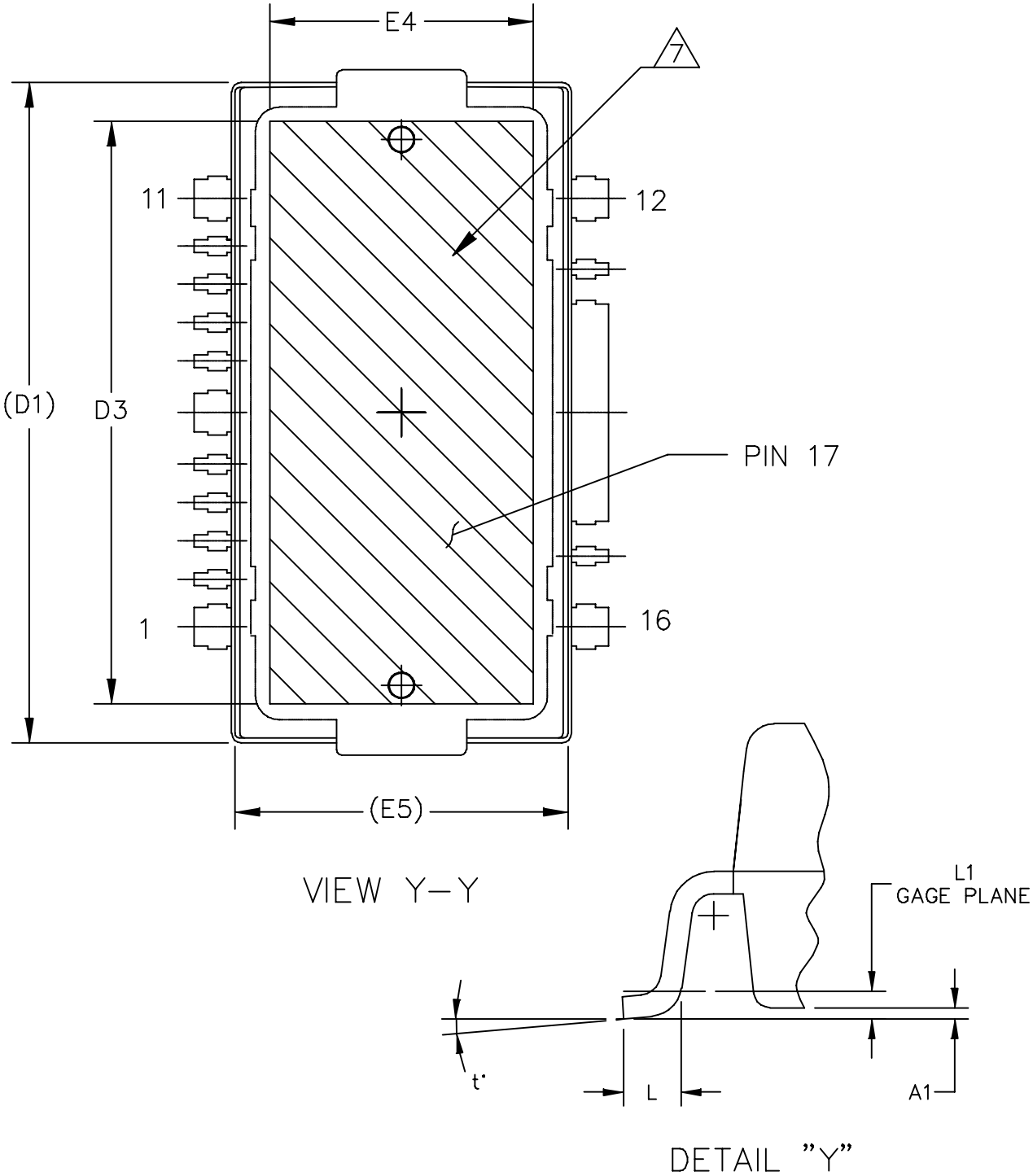

© FREESCALE SEMICONDUCTOR, INC. ALL RIGHTS RESERVED.	MECHANICAL OUTLINE	PRINT VERSION NOT TO SCALE

TITLE: TO–270 WIDE BODY 16 LEAD, GULL WING	DOCUMENT NO: 98ASA10755D	REV: A
	CASE NUMBER: 1887–01	31 AUG 2007
	STANDARD: NON–JEDEC	

NOTES:

1. CONTROLLING DIMENSION: INCH

2. INTERPRET DIMENSIONS AND TOLERANCES PER ASME Y14.5M–1994.

3. DATUM PLANE –H– IS LOCATED AT THE TOP OF LEAD AND IS COINCIDENT WITH THE LEAD WHERE THE LEAD EXITS THE PLASTIC BODY AT THE TOP OF THE PARTING LINE.

4. DIMENSIONS "D" AND "E1" DO NOT INCLUDE MOLD PROTRUSION. ALLOWABLE PROTRUSION IS .006 (0.15) PER SIDE. DIMENSIONS "D" AND "E1" DO INCLUDE MOLD MISMATCH AND ARE DETERMINED AT DATUM PLANE –H–.

5. DIMENSIONS "b", "b1", "b2" AND "b3" DO NOT INCLUDE DAMBAR PROTRUSION. ALLOWABLE DAMBAR PROTRUSION SHALL BE .005 (0.13) TOTAL IN EXCESS OF THE "b", "b1", "b2" AND "b3" DIMENSIONS AT MAXIMUM MATERIAL CONDITION.

6. DATUM –A– AND –B– TO BE DETERMINED AT DATUM PLANE –H–.

7. HATCHING REPRESENTS EXPOSED AREA OF THE HEAT SLUG. HATCHED AREA SHOWN IS ON THE SAME PLANE.

	INCH		MILLIMETER			INCH		MILLIMETER	
DIM	MIN	MAX	MIN	MAX	DIM	MIN	MAX	MIN	MAX
A	.100	.104	2.54	2.64	L	.018	.024	0.46	0.61
A1	.001	.004	0.02	0.10	L1	.010 BSC		0.25 BSC	
A2	.099	.110	2.51	2.79	b	.011	.017	0.28	0.43
D	.712	.720	18.08	18.29	b1	.037	.043	0.94	1.09
D1	.688	.692	17.48	17.58	b2	.037	.043	0.94	1.09
D2	.011	.019	0.28	0.48	b3	.225	.231	5.72	5.87
D3	.600	---	15.24	---	c1	.007	.011	0.18	0.28
E	.429	.437	10.9	11.1	e	.054 BSC		1.37 BSC	
E1	.353	.357	8.97	9.07	e1	.040 BSC		1.02 BSC	
E2	.132	.140	3.35	3.56	e2	.224 BSC		5.69 BSC	
E3	.124	.132	3.15	3.35	e3	.150 BSC		3.81 BSC	
E4	.270	---	6.86	---	t	2°	8°	2°	8°
E5	.346	.350	8.79	8.89	aaa	.004		0.10	

© FREESCALE SEMICONDUCTOR, INC.
ALL RIGHTS RESERVED.

MECHANICAL OUTLINE | PRINT VERSION NOT TO SCALE

TITLE: TO–270 WIDE BODY 16 LEAD, GULL WING

DOCUMENT NO: 98ASA10755D | REV: A

CASE NUMBER: 1887–01 | 31 AUG 2007

STANDARD: NON–JEDEC

PRODUCT DOCUMENTATION

Refer to the following documents to aid your design process.

Application Notes

- AN1907: Solder Reflow Attach Method for High Power RF Devices in Plastic Packages
- AN1955: Thermal Measurement Methodology of RF Power Amplifiers
- AN1977: Quiescent Current Thermal Tracking Circuit in the RF Integrated Circuit Family
- AN1987: Quiescent Current Control for the RF Integrated Circuit Device Family
- AN3263: Bolt Down Mounting Method for High Power RF Transistors and RFICs in Over-Molded Plastic Packages
- AN3789: Clamping of High Power RF Transistors and RFICs in Over-Molded Plastic Packages

Engineering Bulletins

- EB212: Using Data Sheet Impedances for RF LDMOS Devices

REVISION HISTORY

The following table summarizes revisions to this document.

Revision	Date	Description
0	Mar. 2009	• Initial Release of Data Sheet

APPENDIX A
MW7IC2425NR1/GNR1/NBR1 FUNCTIONAL TEST DATA, FIXTURE AND THERMAL DATA

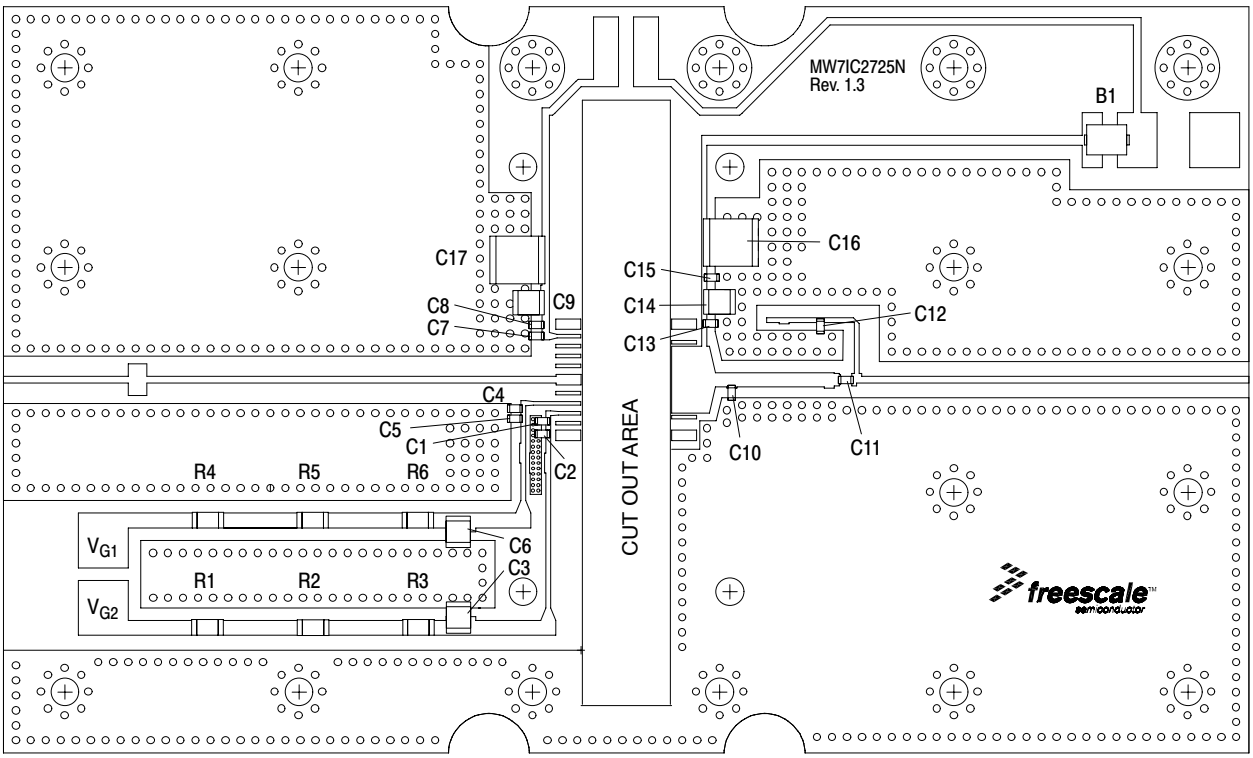

Z1	0.500″ x 0.027″ Microstrip	Z9	0.040″ x 0.061″ Microstrip
Z2	0.075″ x 0.127″ Microstrip	Z10	0.020″ x 0.050″ Microstrip
Z3	1.640″ x 0.027″ Microstrip	Z11	0.050″ x 0.050″ Microstrip
Z4	0.100″ x 0.042″ Microstrip	Z12	0.050″ x 0.027″ Microstrip
Z5	0.151″ x 0.268″ Microstrip	Z13*	0.338″ x 0.020″ Microstrip
Z6	0.025″ x 0.268″ x 0.056″ Taper	Z14	1.551″ x 0.027″ Microstrip
Z7	0.050″ x 0.056″ Microstrip	PCB	Rogers R04350B, 0.0133″, ε_r = 3.48
Z8	0.356″ x 0.056″ Microstrip		

* Line length includes microstrip bends

Figure 1. MW7IC2425NR1(GNR1)(NBR1) Test Circuit Component Layout

Table 1. Electrical Characteristics (T_C = 25°C unless otherwise noted)

Characteristic	Symbol	Min	Typ	Max	Unit
Functional Tests (In Freescale Test Fixture, 50 ohm system) V_{DD} = 28 Vdc, I_{DQ1} = 77 mA, I_{DQ2} = 275 mA, P_{out} = 4 W Avg., f = 2700 MHz, WiMAX, OFDM 802.16d, 64 QAM $^3/_4$, 4 Bursts, 10 MHz Channel Bandwidth, Input Signal PAR = 9.5 dB @ 0.01% Probability on CCDF. ACPR measured in 1 MHz Channel Bandwidth @ ±8.5 MHz Offset.					
Power Gain	G_{ps}	25.5	28.5	30.5	dB
Power Added Efficiency	PAE	15	17	—	%
Output Peak-to-Average Ratio @ 0.01% Probability on CCDF	PAR	—	9	—	dB
Adjacent Channel Power Ratio	ACPR	—	-50	-46	dBc
Input Return Loss	IRL	—	-15	-10	dB

(continued)

Table 1. Electrical Characteristics (T_C = 25°C unless otherwise noted) **(continued)**

Characteristic	Symbol	Min	Typ	Max	Unit
Stage 1 - On Characteristics					
Gate Quiescent Voltage (V_{DS} = 28 Vdc, I_{DQ1} = 77 mA)	$V_{GS(Q)}$	—	2.7	—	Vdc
Fixture Gate Quiescent Voltage (V_{DD} = 28 Vdc, I_{DQ1} = 77 mAdc, Measured in Functional Test)	$V_{GG(Q)}$	12.5	15.8	19.5	Vdc
Stage 2 - On Characteristics					
Gate Quiescent Voltage (V_{DS} = 28 Vdc, I_{DQ2} = 275 mAdc)	$V_{GS(Q)}$	—	2.7	—	Vdc
Fixture Gate Quiescent Voltage (V_{DD} = 28 Vdc, I_{DQ2} = 275 mAdc, Measured in Functional Test)	$V_{GG(Q)}$	11	14	18	Vdc

Table 2. Thermal Characteristics

Characteristic		Symbol	Value	Unit
Thermal Resistance, Junction to Case (Case Temperature 81°C, P_{out} = 25 W CW)	Stage 1, 28 Vdc, I_{DQ1} = 77 mA Stage 2, 28 Vdc, I_{DQ2} = 275 mA	$R_{\theta JC}$	5.5 1.3	°C/W

How to Reach Us:

Home Page:
www.freescale.com

Web Support:
http://www.freescale.com/support

USA/Europe or Locations Not Listed:
Freescale Semiconductor, Inc.
Technical Information Center, EL516
2100 East Elliot Road
Tempe, Arizona 85284
1-800-521-6274 or +1-480-768-2130
www.freescale.com/support

Europe, Middle East, and Africa:
Freescale Halbleiter Deutschland GmbH
Technical Information Center
Schatzbogen 7
81829 Muenchen, Germany
+44 1296 380 456 (English)
+46 8 52200080 (English)
+49 89 92103 559 (German)
+33 1 69 35 48 48 (French)
www.freescale.com/support

Japan:
Freescale Semiconductor Japan Ltd.
Headquarters
ARCO Tower 15F
1-8-1, Shimo-Meguro, Meguro-ku,
Tokyo 153-0064
Japan
0120 191014 or +81 3 5437 9125
support.japan@freescale.com

Asia/Pacific:
Freescale Semiconductor China Ltd.
Exchange Building 23F
No. 118 Jianguo Road
Chaoyang District
Beijing 100022
China
+86 10 5879 8000
support.asia@freescale.com

For Literature Requests Only:
Freescale Semiconductor Literature Distribution Center
P.O. Box 5405
Denver, Colorado 80217
1-800-441-2447 or +1-303-675-2140
Fax: +1-303-675-2150
LDCForFreescaleSemiconductor@hibbertgroup.com

Information in this document is provided solely to enable system and software implementers to use Freescale Semiconductor products. There are no express or implied copyright licenses granted hereunder to design or fabricate any integrated circuits or integrated circuits based on the information in this document.

Freescale Semiconductor reserves the right to make changes without further notice to any products herein. Freescale Semiconductor makes no warranty, representation or guarantee regarding the suitability of its products for any particular purpose, nor does Freescale Semiconductor assume any liability arising out of the application or use of any product or circuit, and specifically disclaims any and all liability, including without limitation consequential or incidental damages. “Typical” parameters that may be provided in Freescale Semiconductor data sheets and/or specifications can and do vary in different applications and actual performance may vary over time. All operating parameters, including “Typicals”, must be validated for each customer application by customer’s technical experts. Freescale Semiconductor does not convey any license under its patent rights nor the rights of others. Freescale Semiconductor products are not designed, intended, or authorized for use as components in systems intended for surgical implant into the body, or other applications intended to support or sustain life, or for any other application in which the failure of the Freescale Semiconductor product could create a situation where personal injury or death may occur. Should Buyer purchase or use Freescale Semiconductor products for any such unintended or unauthorized application, Buyer shall indemnify and hold Freescale Semiconductor and its officers, employees, subsidiaries, affiliates, and distributors harmless against all claims, costs, damages, and expenses, and reasonable attorney fees arising out of, directly or indirectly, any claim of personal injury or death associated with such unintended or unauthorized use, even if such claim alleges that Freescale Semiconductor was negligent regarding the design or manufacture of the part.

Freescale™ and the Freescale logo are trademarks of Freescale Semiconductor, Inc.
All other product or service names are the property of their respective owners.
© Freescale Semiconductor, Inc. 2009. All rights reserved.

Document Number: MW7IC2425N
Rev. 0, 3/2009